Name _____ Class _____ Date _____

CHAPTER 3 Properties of Matter

SECTION 1

What Is Matter?

California Science Standards

8.8.b

BEFORE YOU READ

After you read this section, you should be able to answer these questions:

- What are the properties of matter?
- What is volume?
- What is mass?
- How is weight different from mass?

What Is Matter and Some of Its Properties?

You are made of matter. **Matter** is anything that has mass and takes up space. A toaster, a glass of water, and the air around you are all made of matter.

Matter can be described by its properties. Several properties of matter are volume, mass, and weight. The liter (L) is a scientific unit of volume. The kilogram (kg) is the SI unit for mass, and the newton (N) is the SI unit of weight. ☑

STUDY TIP

Organize Information In your notebook, make a table with three columns. Title them Property of Matter, Definition, and Unit of Measure. As you read this section, fill in the columns.

READING CHECK

1. Identify Give a unit of measure for each of the following:

volume _____

mass _____

weight _____

What Is Volume?

All matter takes up space. The amount of space that an object takes up, or occupies, is known as the object's **volume**.

Imagine a car driven into a swimming pool filled to the top. Some water would splash out. This would happen because the car and the water have volume. Two objects can't occupy the same volume at the same time. ☑

READING CHECK

2. Define What is volume?

_____

_____

_____

UNITS OF VOLUME

The SI unit of volume is the cubic meter (m^3). The figure below shows how big a cubic meter is.

This girl is sitting in a 1 m^3 box and holding a meter stick.

The liter is used more often than the cubic meter as the scientific unit for measuring volume. Small volumes of liquid are often given in milliliters (mL). Remember that 1 L equals 1,000 mL. Any volume of liquid can be described in liters or milliliters. For example, the volume of a small can of soda is measured as 0.355 L or 355 mL.

Math Focus

3. Convert The volume of a half-gallon carton of milk is 1.9 L. How many milliliters is this?

_____

MEASURING LIQUID VOLUME

At home, you may use a measuring cup to determine a liquid's volume. In class, graduated cylinders are used to measure liquid volume accurately.

When you measure an amount of liquid, you must be careful. If you look closely, you will see that the surface of water is curved in a glass container. The curve of the surface of a liquid is called a **meniscus**. ☑

The meniscus may curve only a small amount and may look flat in a large glass container. The amount of a liquid in a container is measured from the lowest point of the meniscus. When you look at the figure below, you can see a meniscus.

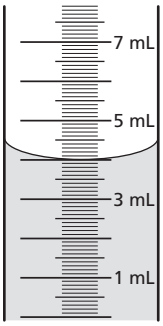

To measure volume correctly, read the scale at the lowest point of the meniscus. The volume is read as 4.0 mL.

READING CHECK

4. Describe What is a meniscus?

_____

_____

_____

TAKE A LOOK

5. Draw On the figure draw a meniscus that would show a volume of 6.0 mL.

VOLUME OF A REGULARLY SHAPED SOLID OBJECT

The volume of any regularly shaped solid object is measured in cubic units. The word *cubic* means that the object is not flat. The volume of an object is calculated by multiplying three measurements: length, width, and height.

Cubic measurements are different from square measurements, which are used for area. The area of an object is flat. It is calculated by multiplying only two measurements: length and width. The figure below shows the difference between volume and area. ☑

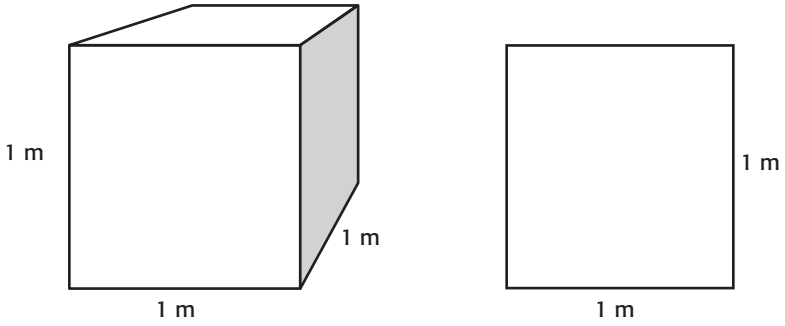

Cube **Square**

The cube has volume. Each face of the cube has area. The square has only area.

READING CHECK

6. Identify What do cubic measurements measure?

_____

7. Identify What do square measurements measure?

_____

Critical Thinking

8. Find What is the area of each face of the cube shown in the figure? Remember that area is length times width.

_____

FINDING THE VOLUME OF A REGULARLY SHAPED OBJECT

There is a formula for calculating the volume of a regularly shaped object, such as a cube.

$$V = 1\ \text{m} \times 1\ \text{m} \times 1\ \text{m} = 1\text{m}^3$$

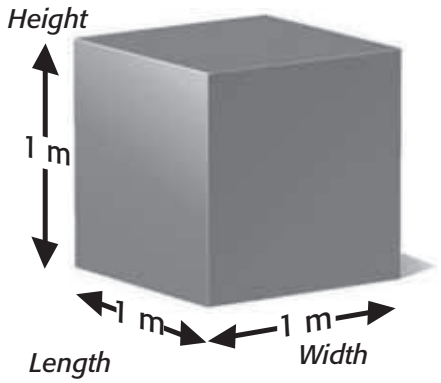

A cube whose length, width, and height are each 1 m has a volume of one cubic meter (1 m^3).

To find the volume (V) of a regularly shaped object, multiply the area (A) and height (h), as shown in the following formula:

$$V = A \times h$$

For example, find the volume of a box that has an area of 400 cm2 and a height of 10 cm.

$$V = A \times h$$
$$V = 400\ \text{cm}^2 \times 10\ \text{cm} = 4{,}000\ \text{cm}^3$$

VOLUME OF AN IRREGULARLY SHAPED OBJECT

One important way to measure the volume of an irregularly shaped object is to put it into a known volume of water. The increase in total volume is equal to the volume of the object.

Remember that objects cannot occupy the same space at the same time. The figure below shows how much water is displaced, or moved, after an object is dropped into it. ☑

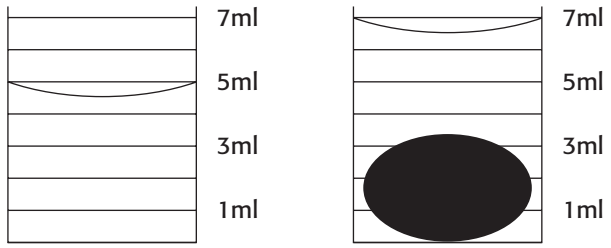

The irregularly shaped solid makes the total volume 2 mL larger. So, its volume is 2 mL.

READING CHECK

9. Describe You are given a toy metal car and asked to find its volume. Describe how you would do this.

_____

_____

_____

_____

_____

_____

What Is Mass?

Another property of matter is mass. **Mass** is a measure of the amount of matter that makes up an object. For example, both you and a penny are made of matter. You are made up of more matter than the penny, so you have a greater mass. ☑

The mass of an object does not change when the location of the object changes. The mass of any object changes only when the amount of matter that makes up the object changes.

READING CHECK

10. Describe What does the mass of an object measure?

_____

_____

DIFFERENCE BETWEEN MASS AND WEIGHT

You may think that mass and weight are the same thing, but they are very different. **Weight** is the measure of the force of gravity on an object. Earth has a force of gravity that keeps all objects from floating into space. When you step on a scale, you are seeing the force with which Earth pulls on you. This is known as your weight. ☑

An object's weight can change, depending on where the object is located. On the other hand, the mass of the object stays the same. For example, a penny weighs less on the moon than here on Earth. This is because the moon exerts a smaller force of gravity than Earth does. However, the mass of the penny, or the amount of matter it has, stays the same. Only the force changes.

The table below shows how mass and weight differ.

	Mass	**Weight**
How it is measured	with a balance	with a scale
What is measured	amount of matter	force of gravity
SI measurement units	kilograms	newtons
Effect of moving it (for example, to the moon)		

READING CHECK

11. Identify When you step on a scale, what is being measured?

_____

Say It

Discuss Form a small group. Discuss what it would be like to have a soccer game on the moon. Think about the weight of the ball and how large the field might be.

TAKE A LOOK

12. Complete Write either "none" or "change" in each of the two empty boxes in the table.

MEASURING MASS AND WEIGHT

The brick and the sponge in the figure below have the same volume. However, because the brick has more mass, Earth pulls on the brick more than it does on the sponge. So, the brick weighs more than the sponge.

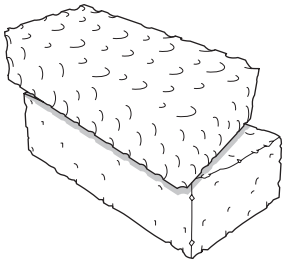

The brick and the sponge take up the same amount of space. The the brick contains more matter, so its mass—and thus its weight—is greater.

The SI unit for mass is the kilogram (kg). Smaller masses are often measured in grams (g) or milligrams (mg). These units can be used to give the mass of any object. ☑

Weight is a measure of gravitational force. The SI unit of weight is the newton (N). One newton is equal to the weight on Earth of an object with a mass of about 100 g. ☑

READING CHECK

13. Identify Name three mass units.

_____

_____

READING CHECK

14. Identify What is the SI unit for force and its symbol?

_____

How Much Would You Weigh on Another Planet?

Have you ever wondered what it would be like visiting another planet or the moon? Would the ground feel the same? Would you feel heavier or lighter?

The table below shows what your weight would be on some other objects in our solar system.

Object in our solar system	Weight (lbs)	Weight (N)
Moon (Earth's)	20	89
Mars	45	200
Venus	110	480
Earth	120	530
Saturn	140	620
Jupiter	320	1,400

Name _____ Class _____ Date _____

Section 1 Review

8.8.b

SECTION VOCABULARY

mass a measure of the amount of matter in an object **matter** anything that has mass and takes up space **meniscus** a curve at a liquid's surface by which one measures the volume of a liquid	**volume** a measure of the size of a body or region in three-dimensional space **weight** a measure of the gravitational force exerted on an object; its value can change with the location of the object in the universe

1. **Describe** Why is an apple an example of matter?

_____

2. **Explain** What is the difference between mass and weight?

_____

_____

3. **Identify** In the figure below, what is the volume of water in the graduated cylinder?

_____

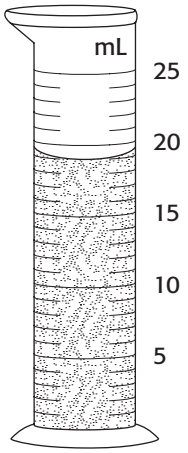

4. **Determine** A rock is placed into a graduated cylinder containing 80 mL of water. What is the volume of the rock if the water level rises to the 120 mL mark?

_____

5. **Calculate** One airline limits the size of carry-on luggage to a volume of 40,000 cm^3. A passenger has a carry-on that has an area of 1,960 cm^2 and is 23 cm high. Is the passenger's luggage OK to carry onto the airplane? Show your work.

_____

_____

_____